Installation Instructions

Corbin Russwin
ASSA ABLOY

ED5200S (A) x M107

Windstorm Exit Device Shim Kits

Shim Locations

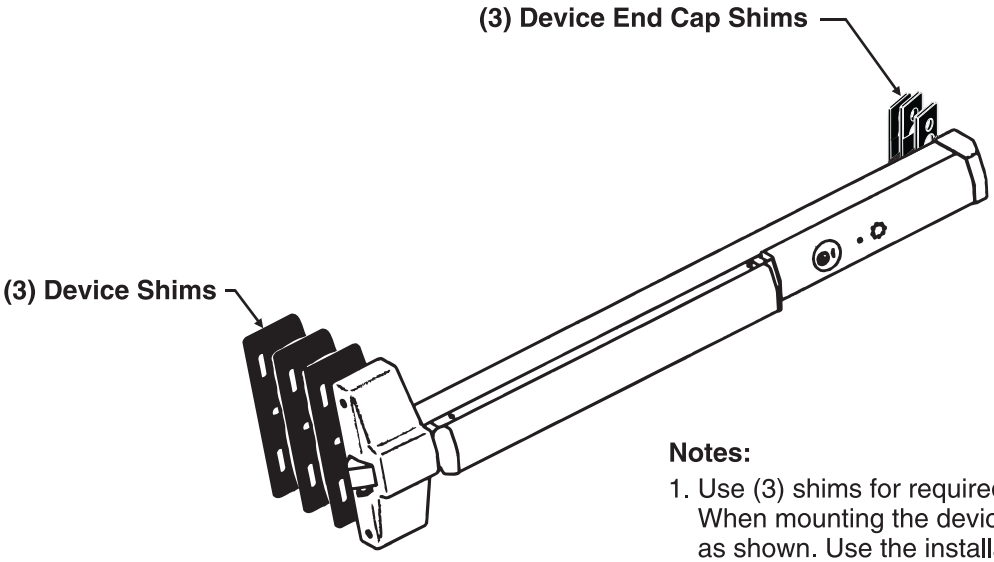

Notes:

1. Use (3) shims for required 3/8" (9.5) lift. When mounting the device, position shims as shown. Use the installation instructions packed with the unit. Use longer screws provided with this kit.

2. For SecureBolt Device, Strike, and Shim locations, see illustration below.

⚠ Caution: Strike location will vary.

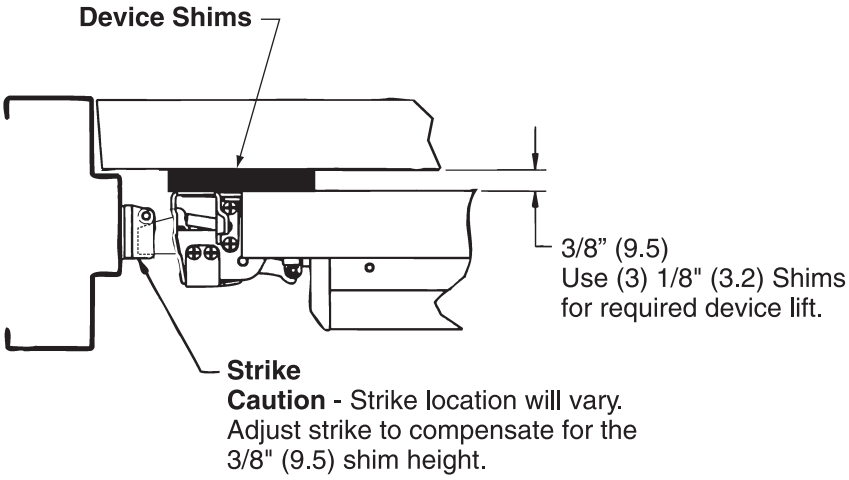

⚠ WARNING

This product can expose you to lead which is known to the state of California to cause cancer and birth defects or other reproductive harm. For more information go to www.P65warnings.ca.gov.

⚠ WARNING

Attention Installer: Improper installation may result in damage to the product and void the factory warranty.

For installation assistance contact Corbin Russwin
1-800-543-3658 • techsupport.corbinrusswin@assaabloy.com

Copyright © 2009, 2025, ASSA ABLOY Access and Egress Hardware Group, Inc. All rights reserved. Reproduction in whole or in part without the express written permission of ASSA ABLOY Access and Egress Hardware Group, Inc. is prohibited.

FM236 06/25

Experience a safer and more open world

Trim Spindle Instructions for Windstorm Applications

Caution:

Prior to installing M107 Spindle Assembly, use the breakaway feature to modify the length according to the corresponding door thickness.

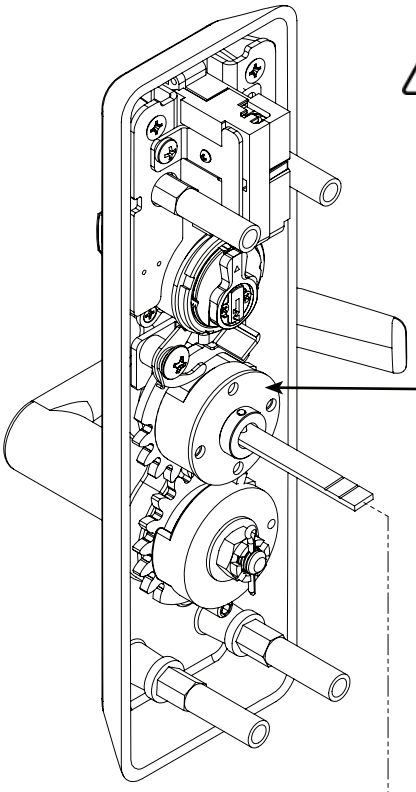

Spindle Assembly
Remove and replace with long spindle assembly furnished with the Windstorm Shim Kit

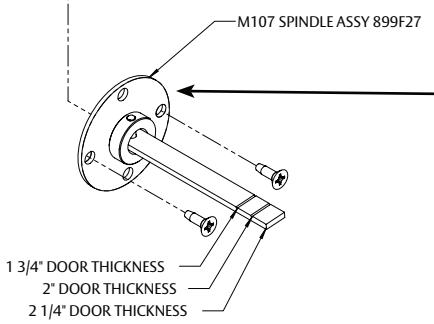

Spindle Assembly (Long)

Follow detail Figure 1 for sizing the tailpiece to the door and shim thickness. Dimensions are given in inches (mm).

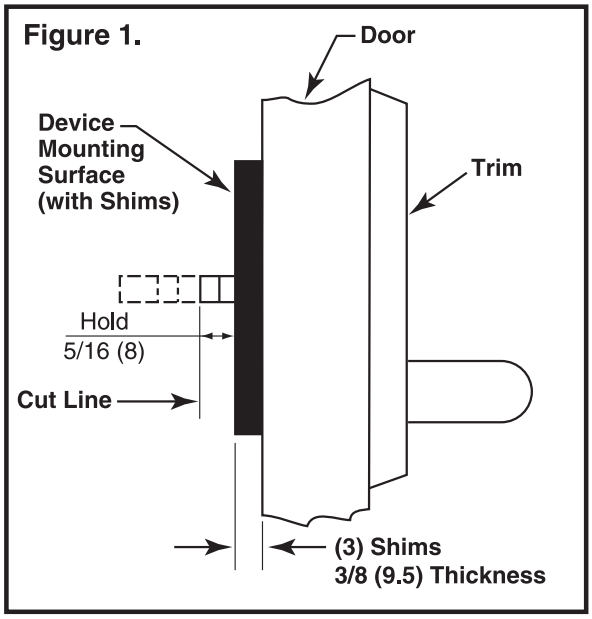

Copyright © 2009, 2025, ASSA ABLOY Access and Egress Hardware Group, Inc. All rights reserved. Reproduction in whole or in part without the express written permission of ASSA ABLOY Access and Egress Hardware Group, Inc. is prohibited.

Experience a safer and more open world