FOR THE TOP AND BOTTOM GUIDES MOUNTING HOLES USE A #2 OR 15/64 DRILL BIT. FOR THE 3- MOUNTING HOLES TO SECURE THE CARTRIDGE USE A 11/64 DRILL BIT. THE CYLINDER HOLE DIAMETER USE A 27/32 DRILL BIT OR HOLE SAW. COUNTER SINK ALL MOUNTING HOLES.

PRODUCT MUST BE INSTALLED ACCORDING TO ALL APPLICABLE BUILDING AND LIFE SAFETY CODES

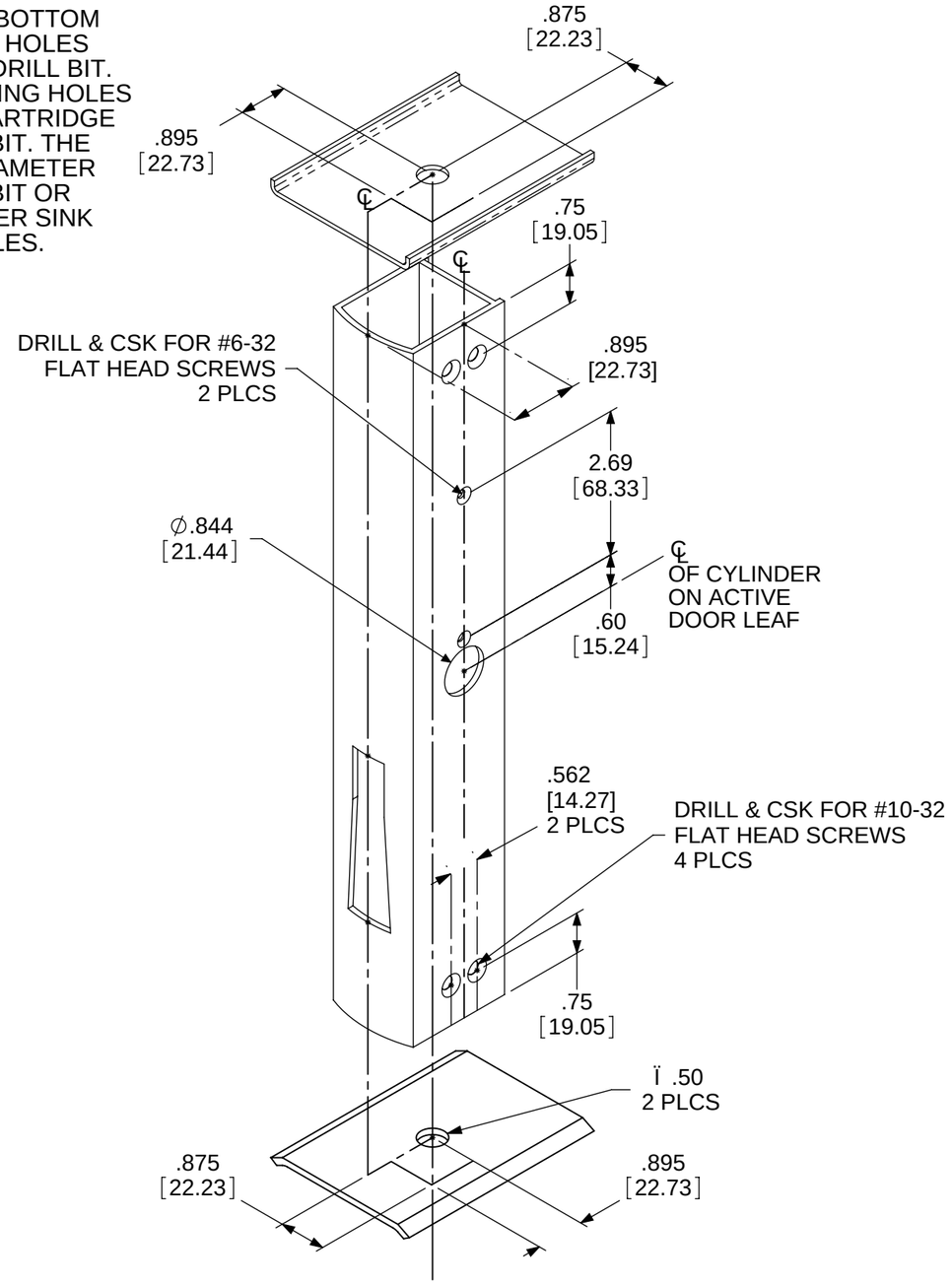

STILE PREPARATION

FROM INTERIOR FACE OF DOOR

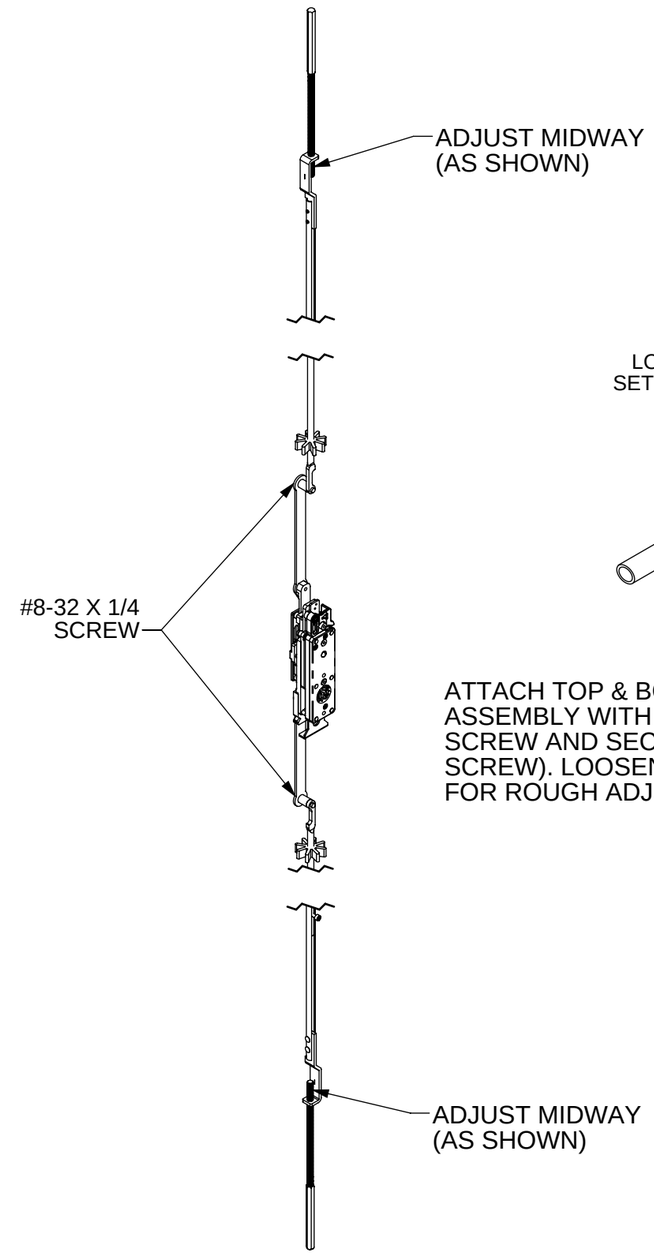

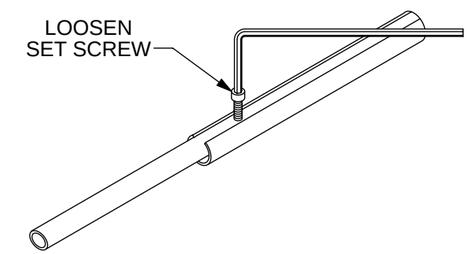

FIG. 3

ATTACH TOP & BOTTOM RODS TO CARTRIDGE ASSEMBLY WITH 8-32X 1/4" NYLON PATCH SCREW AND SECURE. (DO NOT BACK OUT SCREW). LOOSEN ALLEN SCREW ON SLEEVE FOR ROUGH ADJUSTMENT, SEE (FIG-3)

CARTRIDGE AND ROD ASSEMBLY

LAY THE ROD ASSEMBLY & CARTRIDGE ON TOP OF STILE WITH CARTRIDGE OVER CYLINDER HOLE CUT OUT. ADJUST THE RODS FLUSH WITH TOP & BOTTOM EDGE OF DOOR AS SHOWN ON (FIG-4). WHEN THEY ARE ADJUSTED CORRECTLY ON BOTTOM & TOP EDGES OF DOOR TIGHTEN THE ALLEN HEAD SCREW ALL THE WAY THROUGH THE SLEEVE AS SHOWN ON FIG-5.

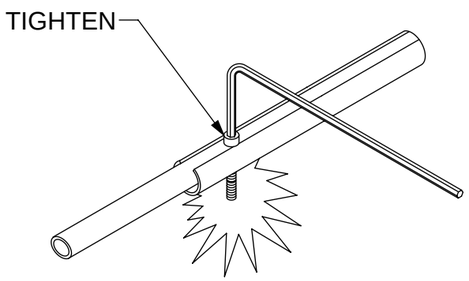

FIG. 5

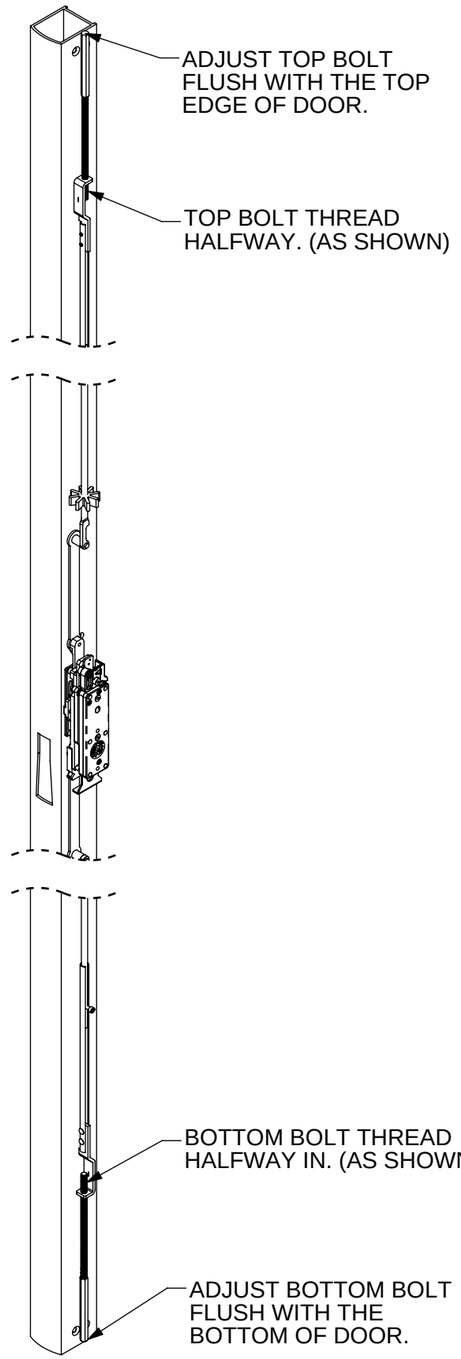

FIG. 4

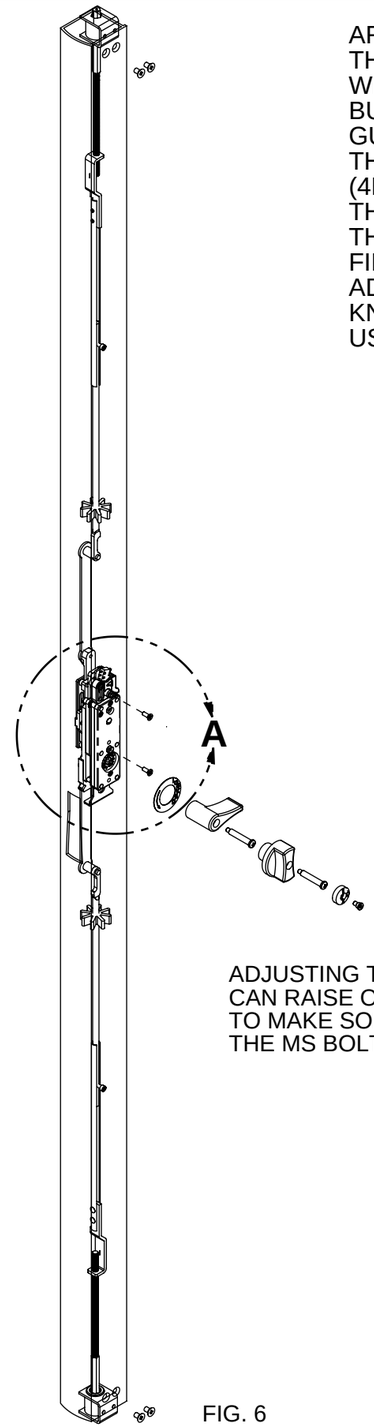

FIG. 6

AFTER YOU HAVE ADJUSTED THE RODS SLIDE THEM INTO THE STILE, SECURE THE CARTRIDGE WITH THE 6-32X3/8" SCREWS, (3EA). INSERT BUSHING INTO THE ROD GUIDES THEN SLIDE THE GUIDES OVER THE RODS, (TOP AND BOTTOM) THEN SECURE WITH THE 10-32X 5/16 SCREWS, (4EA). AFTER ALL SCREWS ARE SECURE TAKE THE INDICATOR AND PEEL OFF THE PAPER FROM THE BACK OF THE INDICATOR PLATE AND PRESS FIRMLY ONTO THE STILE OVER KNOB HOLE SO ADHESIVE STICKS FIRMLY TO STILE. THEN INSERT KNOB AND SECURE WITH THE ALLEN SCREW USING THE ALLEN WRENCH AND TIGHTEN.

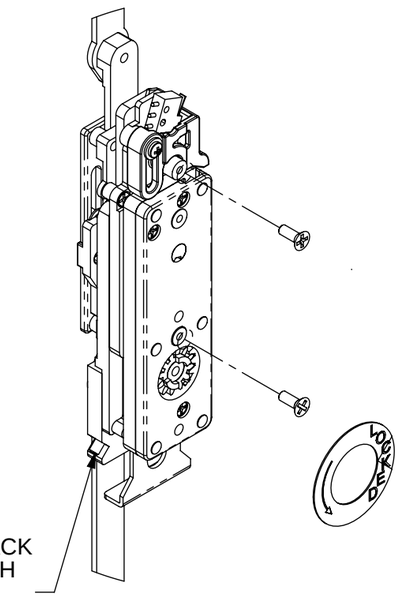

DETAIL A
SCALE 1 : 2

PRODUCT MUST BE INSTALLED ACCORDING TO ALL APPLICABLE BUILDING AND LIFE SAFETY CODES

CARTRIDGE AND ROD ASSEMBLY